Superior Efficacy & Lumen output with Small Form Factor

**SZDR5A0D**

**S1CH – 3535660003 – 00000000 - 00003**

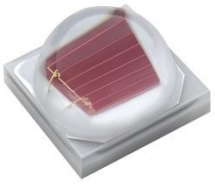

# Product Brief

## Description

- The Z-Power series is designed for high flux output applications with high current operation capability.
- It incorporates state of the art SMD design and low thermal resistant material.

## Features and Benefits

- Super high Flux output and high Luminance
- Designed for high current operation
- SMT solderable
- Lead Free product
- RoHS compliant

## Key Applications

- Horticulture
- Architectural lighting

# Table of Contents

**Index**


| | | |
|---|---|---|
| • | Product Brief | 1 |
| • | Table of Contents | 2 |
| • | Performance Characteristics | 3 |
| • | Characteristics Graph | 5 |
| • | Mechanical Dimensions | 9 |
| • | Recommended Solder Pad | 10 |
| • | Reflow Soldering Characteristics | 11 |
| • | Emitter Tape & Reel Packaging | 12 |
| • | Packaging Information | 14 |
| • | Product Nomenclature | 15 |
| • | Handling of Silicone Resin for LEDs | 16 |
| • | Precaution For Use | 17 |
| • | Company Information | 20 |

# Performance Characteristics

**Table 1. Electro-Optical characteristics at 350mA (Ta=25℃, RH30%)**

| Parameter | Symbol | Value | | | Unit |
|---|---|---|---|---|---|
| | | Min. | Typ. | Max. | |
| Radiant Power [1] | | - | 515 | - | mW |
| Peak Wavelength | λp | 646 | 657 | 667 | nm |
| PPF | Φp | - | 2.81 | - | μmol/s |
| PPE | $K_P$ | - | 4.09 | - | μmol/J |
| Forward Voltage (@350mA) [3] | $V_F$ | - | 1.96 | - | V |
| Thermal resistance (J to S) | $R\theta_{J-S}$ | - | 3.0 | - | K/W |
| View Angle | 2Θ ½ | | 125 | | deg. |

**Table 2. Absolute Maximum Ratings**

| Parameter | Symbol | Value | | | Unit |
|---|---|---|---|---|---|
| | | Min. | Typ. | Max. | |
| Forward Current | $I_F$ | - | 350 | 1000 | mA |
| Reverse Voltage | $V_R$ | - | - | 5 | V |
| Junction Temperature | $T_j$ | - | - | 125 | ºC |
| Operating Temperature | $T_{op}$ | - 40 | - | 105 | ºC |
| Storage Temperature | $T_{stg}$ | - 40 | - | 125 | ºC |
| ESD Sensitivity(HBM) [4] | | - | Class 3B | - | kV |

**Notes :**

(1) SSC maintains a tolerance of ±7% on power measurements.

(2) Photosynthetic Photon Flux includes wavelengths between 400 and 700 nm.

(3) Photosynthetic Photon Efficacy includes wavelengths between 400 and 700 nm.

(4) Tolerance is ±0.06V on forward voltage measurements

(5) The zener diode is included to protect the product from ESD.

(6) It is recommended to use it in the condition that the reliability is secured within the max value

- Thermal resistance can be increased substantially depending on the heat sink design/operating condition, and the maximum possible driving current will decrease accordingly.

# Performance Characteristics

**Table 3. Bin Code Description**

| Bin Code | | |
|---|---|---|
| Radiant Power (mW) @ $I_F$ = 350mA | Peak Wavelength (nm) @ $I_F$ = 350mA | Forward Voltage (V) @ $I_F$ = 350mA |
| J3x,J4x | RR5 | C,D |

| Radiant Power (mW) @ IF = 350mA | | |
|---|---|---|
| Bin Code | Min. | Max. |
| J33 | 480 | 500 |
| J34 | 500 | 520 |
| J41 | 520 | 540 |
| J42 | 540 | 560 |

| Peak Wavelength (nm) @ $I_F$ = 350mA | | |
|---|---|---|
| Bin Code | Min. | Max. |
| RR5 | 646 | 667 |

| Forward Voltage (V) @ IF = 350mA | | |
|---|---|---|
| Bin Code | Min. | Max. |
| C | 1.75 | 2.1 |
| D | 2.1 | 2.2 |

**Table 4. Brightness Groups**

| Part No | Peak Wavelength | Rank | Radiant Power (mW) | | PPF (μmol/s) | | PPE (μmol/J) |
|---|---|---|---|---|---|---|---|
| | | | Min | Max | Min | Max | Typ |
| SZDR5A0D | 660nm | J33 | 480 | 500 | 2.62 | 2.73 | 3.90 |
| | | J34 | 500 | 520 | 2.73 | 2.84 | 4.06 |
| | | J41 | 520 | 540 | 2.84 | 2.95 | 4.22 |
| | | J42 | 540 | 560 | 2.95 | 3.06 | 4.38 |

# Characteristics Graph

**Color Spectrum**

(IF=350mA, Ta=25℃, RH30%)

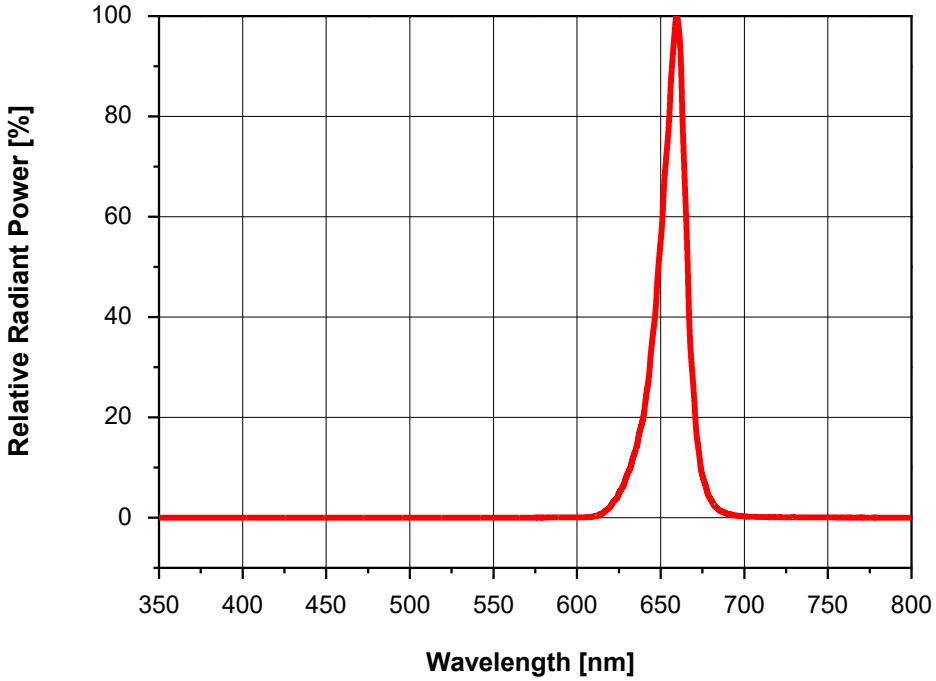


**Forward Voltage vs. Forward Current, Ta=25℃**

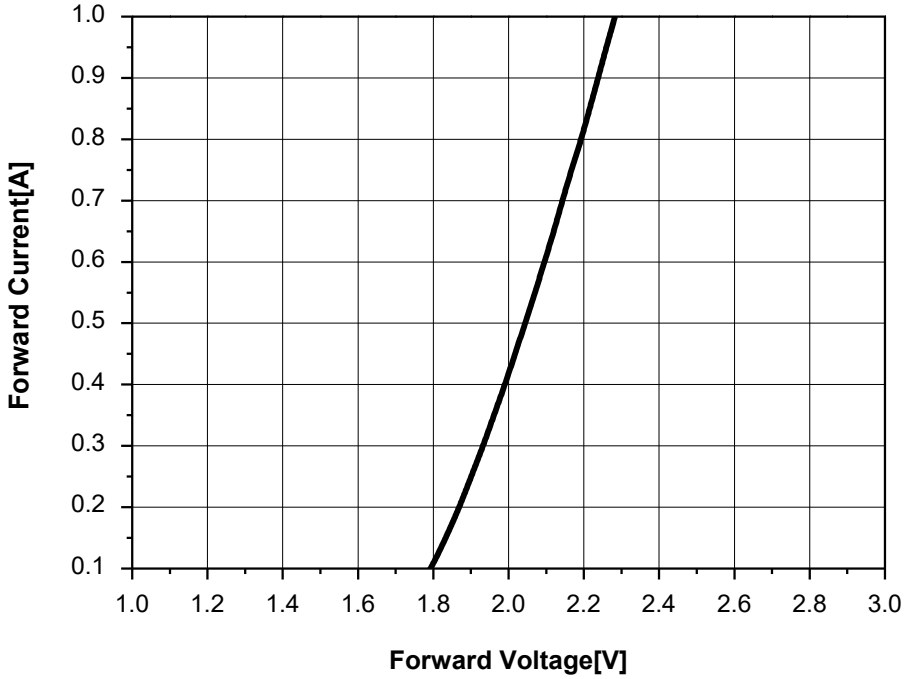

# Characteristics Graph

**Forward Current vs. Normalized Relative Luminous Flux, Ta=25℃**

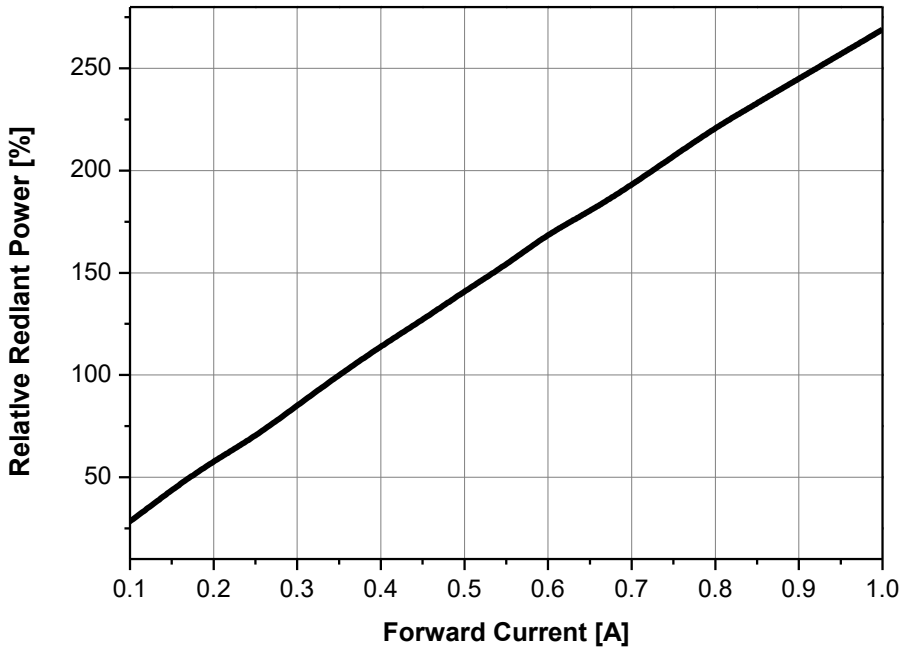


**Forward Current vs Peak Wavelength, Ta=25℃**

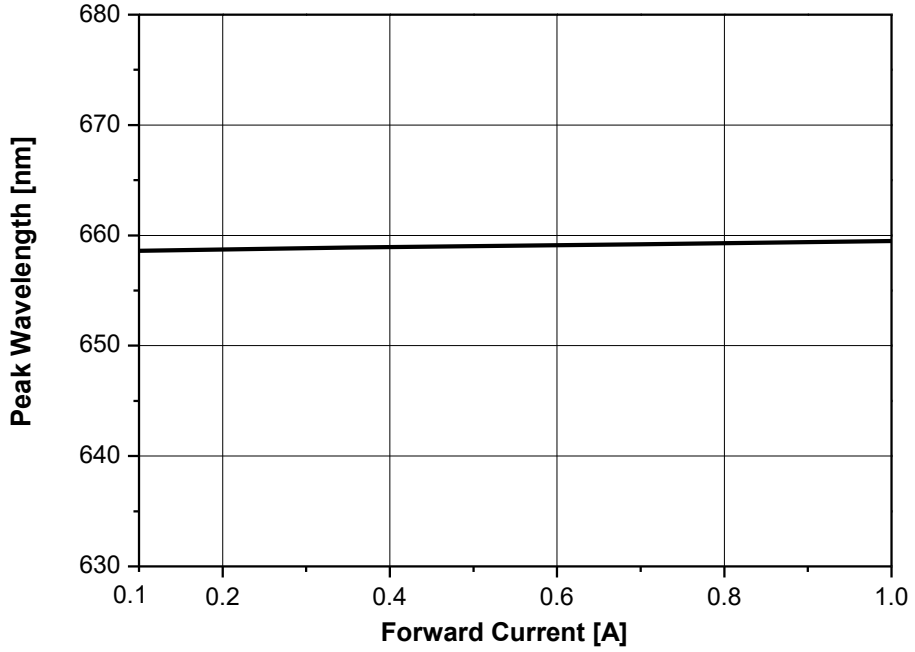

# Characteristics Graph

**Junction Temperature vs. Relative Light Output at IF=350mA**

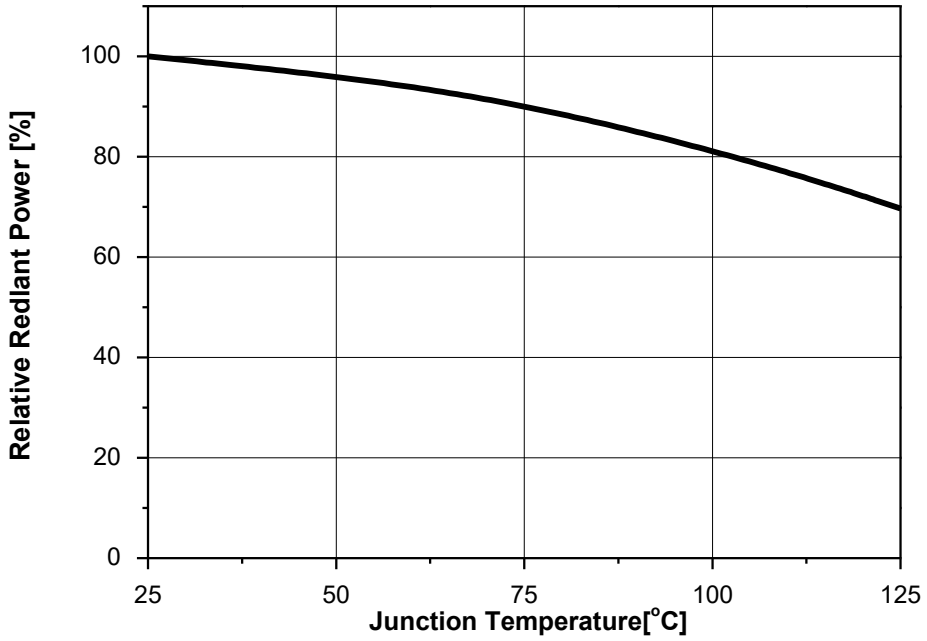


**Junction Temperature vs. Forward Voltage at IF=350mA**

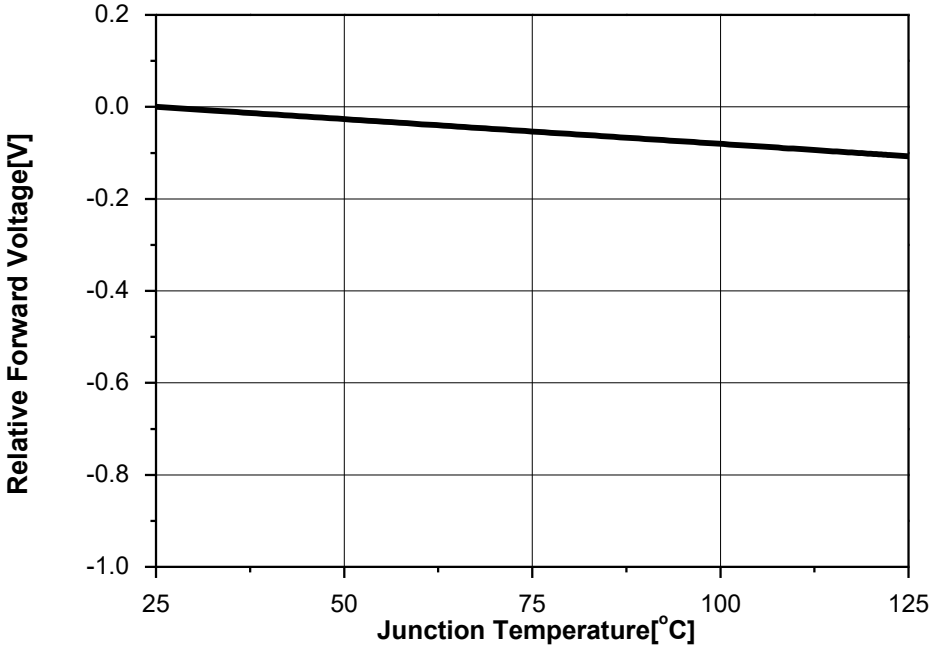

# Characteristics Graph

**Junction Temperature vs. Peak Wavelength at IF=350mA**

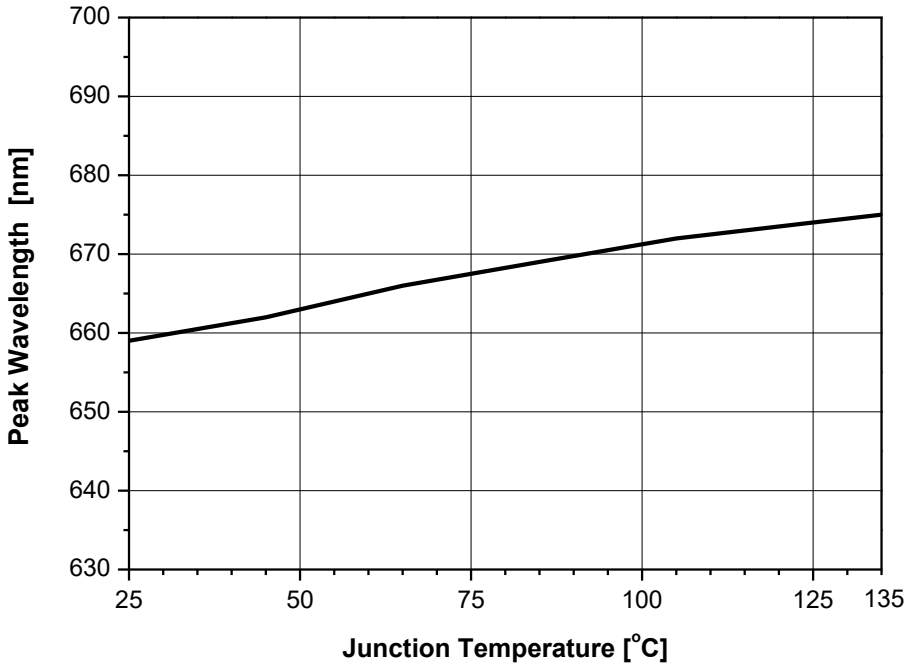

## Mechanical Dimensions

### Top View

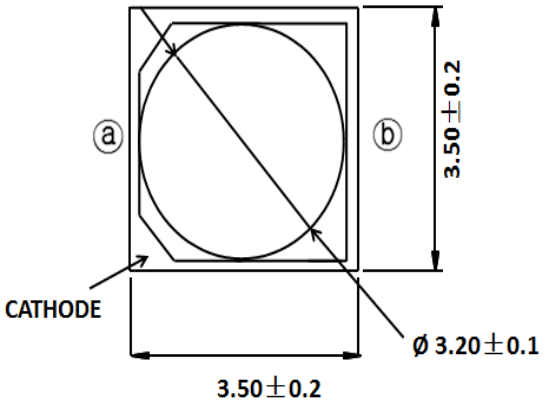


### Bottom View

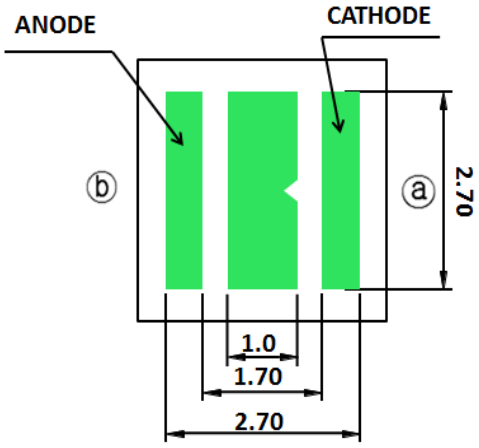


### Side View

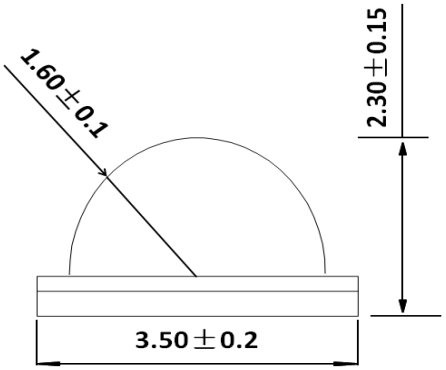


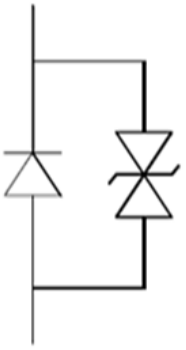

(1) All dimensions are in millimeters.
(2) Scale : none
(3) Undefined tolerance is ±0.1mm

# Recommended Solder Pad

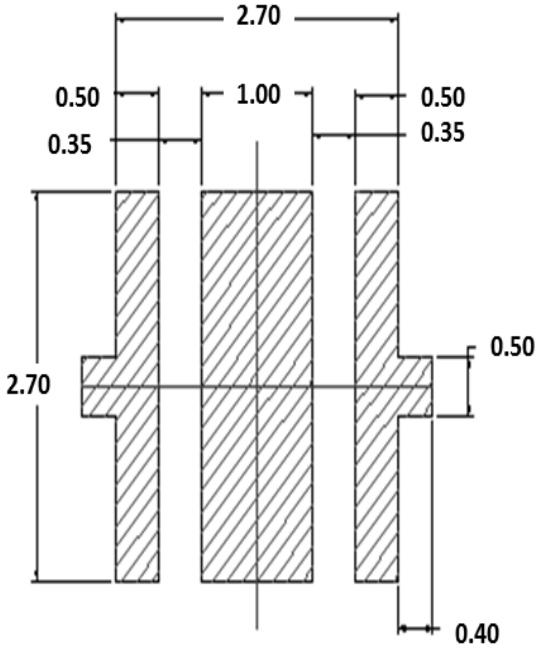


Recommended PCB Solder Pad

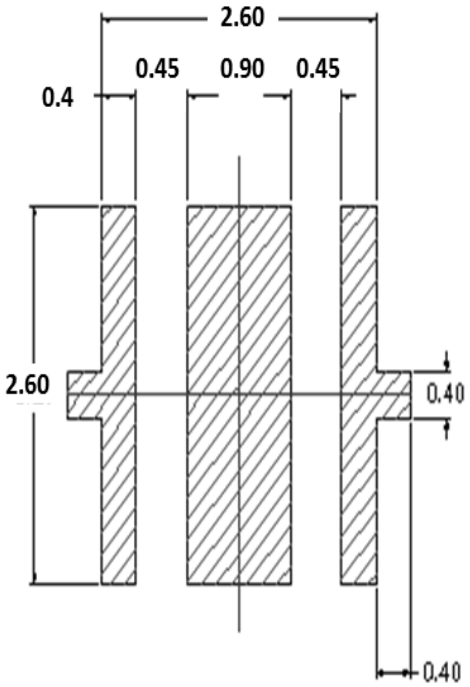


Recommended Stencil Pattern

(1) All dimensions are in millimeters.
(2) Scale : none
(3) This drawing without tolerances are for reference only.
(4) Undefined tolerance is ±0.1mm.

# Reflow Soldering Characteristics

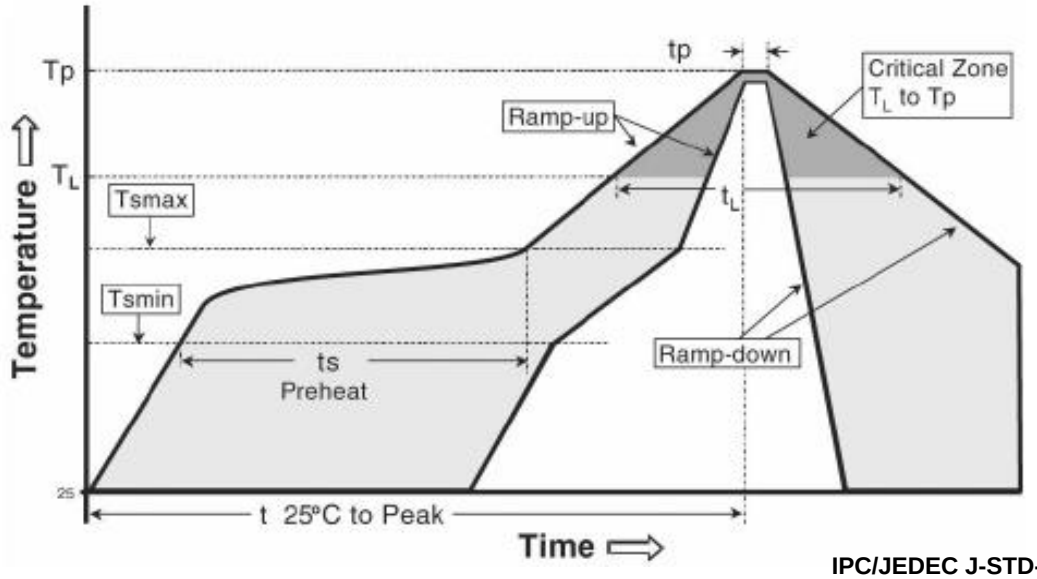


IPC/JEDEC J-STD-020

| Profile Feature | Sn-Pb Eutectic Assembly | Pb-Free Assembly |
|---|---|---|
| Average ramp-up rate (Tsmax to Tp) | 3° C/second max. | 3° C/second max. |
| Preheat<br>- Temperature Min (Tsmin)<br>- Temperature Max (Tsmax)<br>- Time (Tsmin to Tsmax) (ts) | <br>100 °C<br>150 °C<br>60-120 seconds | <br>150 °C<br>200 °C<br>60-180 seconds |
| Time maintained above:<br>- Temperature (TL)<br>- Time (tL) | <br>183 °C<br>60-150 seconds | <br>217 °C<br>60-150 seconds |
| Peak Temperature (Tp) | 215℃ | 260℃ |
| Time within 5°C of actual Peak Temperature (tp)2 | 10-30 seconds | 20-40 seconds |
| Ramp-down Rate | 6 °C/second max. | 6 °C/second max. |
| Time 25°C to Peak Temperature | 6 minutes max. | 8 minutes max. |

## Caution

(1) Reflow soldering is recommended not to be done more than two times. In the case of more than 24 hours passed soldering after first, LED will be damaged.
(2) Repairs should not be done after the LED have been soldered. When repair is unavoidable, suitable tools must be used.
(3) Die slug is to be soldered.
(4) When soldering, do not put stress on the LED during heating.
(5) After soldering, do not warp the circuit board.

# Emitter Tape & Reel Packaging

## Labeling

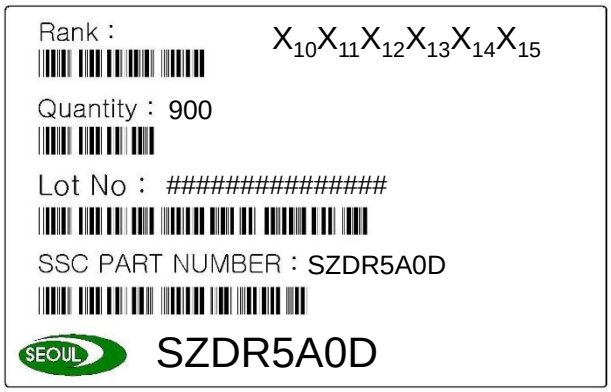


### Full code form

$X_1X_2X_3X_4X_5X_6X_7X_8$

- $X_1$ : Company
- $X_2$ : Z-Power LED series number
- $X_3$ $X_4$ : Color Specification
- $X_5$ : PKG Series
- $X_6$ : Lens Type
- $X_7$ : PCB Type
- $X_8$ : Revision No.

### Rank

$X_{10}X_{11}X_{12}X_{13}$

- $X_{10}$ $X_{11}$ : Radiant Power [mW]
- $X_{12}X_{13}X_{14}$ : Dominant or Peak Wavelength [nm]
- $X_{15}$ : Forward Voltage : $V_F$ [V]

### Lot No

$\#_1\#_2\#_3\#_4\#_5\#_6$ - $\#_7\#_8\#_9\#_{10}$ - $\#_{11}\#_{12}\#_{13}$

- $\#_1$ $\#_2$ : Year
- $\#_3$ $\#_4$ : Month
- $\#_5$ $\#_6$ : Day
- $\#_7$ $\#_8$ $\#_9$ $\#_{10}$ : Mass order
- $\#_{11}$ $\#_{12}$ $\#_{13}$ : Tray No.

# Emitter Tape & Reel Packaging

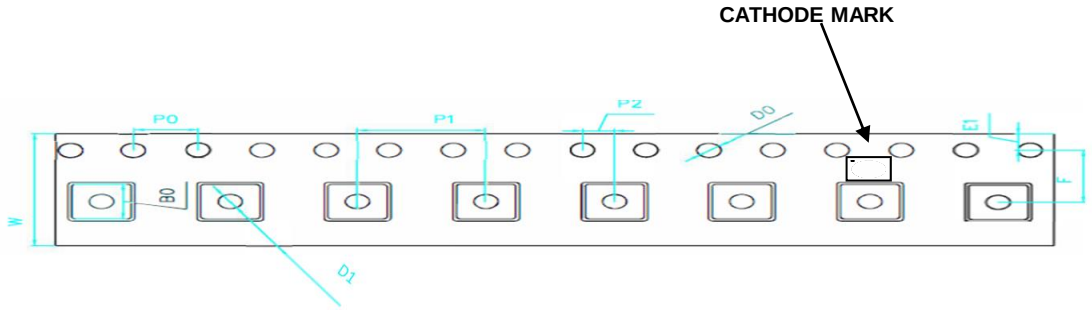


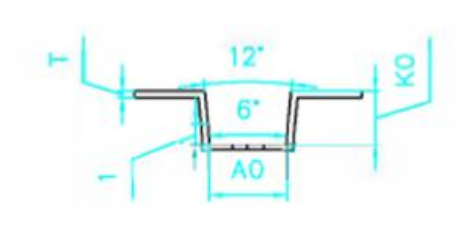


| | | | |
|---|---|---|---|
| A0 | 3.70±0.10 | E1 | 1.75±0.10 |
| B0 | 3.70±0.10 | F | 5.50±0.10 |
| K0 | 2.55±0.10 | D0 | 1.50 + 0.10-0.0 |
| P0 | 4.00±0.10 | D1 | 1.50±0.10 |
| P1 | 8.00±0.10 | T | 0.30±0.05 |
| P2 | 2.00±0.10 | W | 12.00±0.30 |

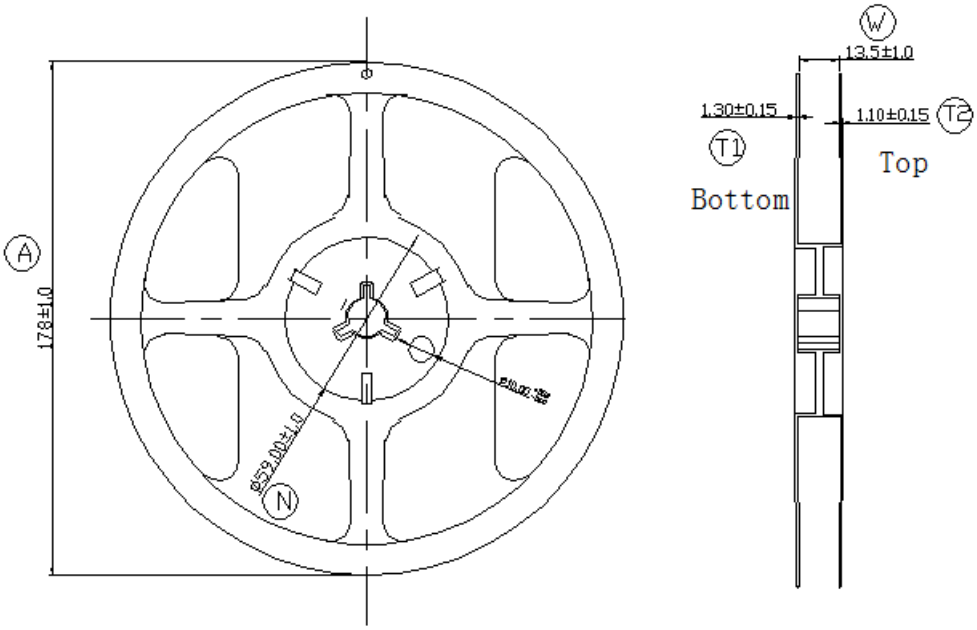


**Notes :**

1. Quantity : 900pcs/Reel
2. Cumulative Tolerance : Cumulative Tolerance/10 pitches to be ±0.2mm
3. Adhesion Strength of Cover Tape : Adhesion strength to be 10-70g when the cover tape is turned off from the carrier tape at the angle of 10º to the carrier tape
4. Package : P/N, Manufacturing data Code No. and quantity to be indicated on a damp proof Package

# Packaging Information

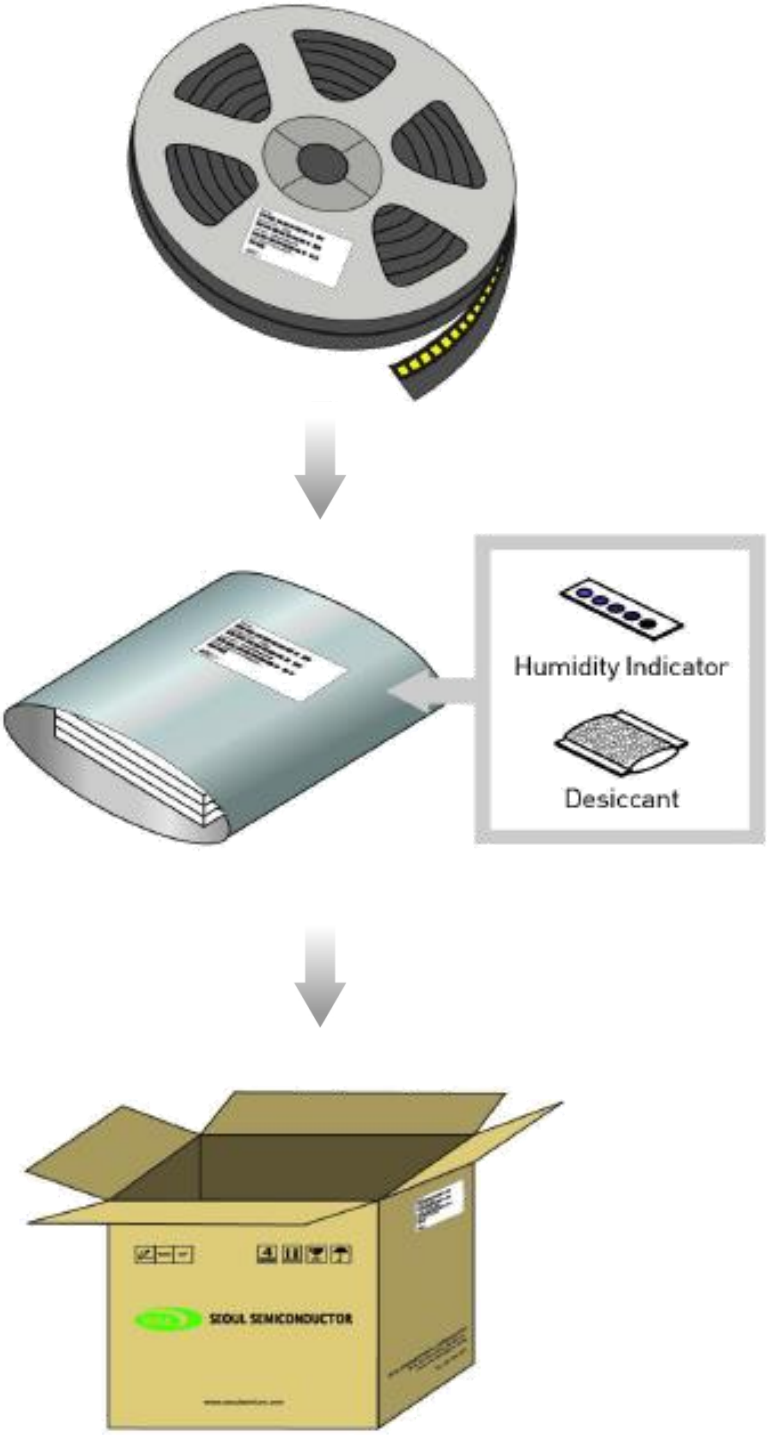

# Product Nomenclature

### Part Numbering System

| Part Number Code | Description | Part Number | Value |
|---|---|---|---|
| $X_1$ | Company | S | Seoul Semiconductor |
| $X_2$ | Level of Integration | 1 | Discrete LED |
| $X_3X_4$ | Technology | CH | Color Horticulture |
| | | | |
| $X_5X_6X_7X_8$ | Dimension | 3535 | |
| $X_9X_{10}$ | Wavelength | 66 | (X10) nm |
| $X_{11}X_{12}$ | CRI | - | |
| $X_{13}X_{14}$ | Vf | 03 | |
| | | | |
| $X_{15}X_{16}X_{17}$ | Characteristic code<br>Flux Rank | 000 | |
| $X_{18}X_{19}X_{20}$ | Characteristic code<br>Vf Rank | 000 | |
| $X_{21}X_{22}$ | Characteristic code<br>Color Step | 00 | |
| | | | |
| $X_{23}X_{24}$ | Type | 00 | |
| $X_{25}X_{26}X_{27}$ | Internal code | 003 | |

# Handling of Silicone Resin for LED

(1) During processing, mechanical stress on the surface should be minimized as much as possible. Sharp objects of all types should not be used to pierce the sealing compound.

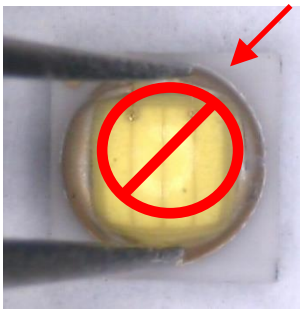

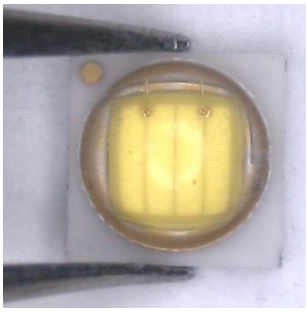

(2) In general, LED should only be handled from the side. By the way, this also applies to LED without a silicone sealant, since the surface can also become scratched.

(3) When populating boards in SMT production, there are basically no restrictions regarding the form of the pick and place nozzle, except that mechanical pressure on the surface of the resin must be prevented. This is assured by choosing a pick and place nozzle which is larger than the LED's reflector area.

(4) Silicone differs from materials conventionally used for the manufacturing of LEDs. These conditions must be considered during the handling of such devices. Compared to standard encapsulants, silicone is generally softer, and the surface is more likely to attract dust. As mentioned previously, the increased sensitivity to dust requires special care during processing. In cases where a minimal level of dirt and dust particles cannot be guaranteed, a suitable cleaning solution must be applied to the surface after the soldering of components.

(5) Seoul Semiconductor suggests using isopropyl alcohol for cleaning. In case other solvents are used, it must be assured that these solvents do not dissolve the package or resin. Ultrasonic cleaning is not recommended. Ultrasonic cleaning may cause damage to the LED.

(6) Please do not mold this product into another resin (epoxy, urethane, etc) and do not handle this product with acid or sulfur material in sealed space.

(7) Avoid leaving fingerprints on silicone resin parts.

# Precaution for Use

(1) Storage

To avoid the moisture penetration, we recommend storing Z5 Series LED in a dry box with a desiccant . The recommended storage temperature range is 5℃ to 30℃ and a maximum humidity of RH50%.

(2) Use Precaution after Opening the Packaging

Use SMT techniques properly when you solder the LED as separation of the lens may affect the light output efficiency.

Pay attention to the following:

a. Recommend conditions after opening the package

- Sealing / Temperature : 5 ~ 40℃ Humidity : less than RH30%

b. If the package has been opened more than 4 weeks (MSL 2a) or the color of the desiccant changes, components should be dried for 10-12hr at 60±5℃

(3) Do not apply mechanical force or excess vibration during the cooling process to normal temperature after soldering.

(4) Do not rapidly cool device after soldering.

(5) Components should not be mounted on warped (non coplanar) portion of PCB.

(6) Radioactive exposure is not considered for the products listed here in.

(7) Gallium arsenide is used in some of the products listed in this publication. These products are dangerous if they are burned or shredded in the process of disposal. It is also dangerous to drink the liquid or inhale the gas generated by such products when chemically disposed of.

(8) This device should not be used in any type of fluid such as water, oil, organic solvent and etc. When washing is required, IPA (Isopropyl Alcohol) should be used.

(9) When the LED are in operation the maximum current should be decided after measuring the package temperature.

(10) The appearance and specifications of the product may be modified for improvement without notice.

(11) Long time exposure of sunlight or occasional UV exposure will cause lens discoloration.

# Precaution for Use

(12) VOCs (Volatile organic compounds) emitted from materials used in the construction of fixtures can penetrate silicone encapsulants of LED and discolor when exposed to heat and photonic energy. The result can be a significant loss of light output from the fixture. Knowledge of the properties of the materials selected to be used in the construction of fixtures can help prevent these issues.

(13) Attaching LEDs, do not use adhesives that outgas organic vapor.

(14) The driving circuit must be designed to allow forward voltage only when it is ON or OFF. If the reverse voltage is applied to LED, migration can be generated resulting in LED damage.

(15) LED is sensitive to Electro-Static Discharge (ESD) and Electrical Over Stress (EOS). Below is a list of suggestions that Seoul Semiconductor purposes to minimize these effects.

a. ESD (Electro Static Discharge)

Electrostatic discharge (ESD) is the defined as the release of static electricity when two objects come into contact. While most ESD events are considered harmless, it can be an expensive problem in many industrial environments during production and storage. The damage from ESD to an LED may cause the product to demonstrate unusual characteristics such as:

- Increase in reverse leakage current lowered turn-on voltage
- Abnormal emissions from the LED at low current

The following recommendations are suggested to help minimize the potential for an ESD event.
One or more recommended work area suggestions:

- Ionizing fan setup
- ESD table/shelf mat made of conductive materials
- ESD safe storage containers

One or more personnel suggestion options:
- Antistatic wrist-strap
- Antistatic material shoes
- Antistatic clothes

Environmental controls:
- Humidity control (ESD gets worse in a dry environment)

# Precaution for Use

b. EOS (Electrical Over Stress)

Electrical Over-Stress (EOS) is defined as damage that may occur when an electronic device is subjected to a current or voltage that is beyond the maximum specification limits of the device.
The effects from an EOS event can be noticed through product performance like:

- Changes to the performance of the LED package
  (If the damage is around the bond pad area and since the package is completely encapsulated the package may turn on but flicker show severe performance degradation.)
- Changes to the light output of the luminaire from component failure
- Components on the board not operating at determined drive power

Failure of performance from entire fixture due to changes in circuit voltage and current across total circuit causing trickle down failures. It is impossible to predict the failure mode of every LED exposed to electrical overstress as the failure modes have been investigated to vary, but there are some common signs that will indicate an EOS event has occurred:

- Damaged may be noticed to the bond wires (appearing similar to a blown fuse)
- Damage to the bond pads located on the emission surface of the LED package
  (shadowing can be noticed around the bond pads while viewing through a microscope)
- Anomalies noticed in the encapsulation and phosphor around the bond wires.
- This damage usually appears due to the thermal stress produced during the EOS event.

c. To help minimize the damage from an EOS event Seoul Semiconductor recommends utilizing:

- A surge protection circuit
- An appropriately rated over voltage protection device
- A current limiting device

# Company Information

### Published by

Seoul Semiconductor © 2013 All Rights Reserved.

### Company Information

Seoul Semiconductor (www.SeoulSemicon.com) manufacturers and packages a wide selection of light emitting diodes (LEDs) for the automotive, general illumination/lighting, Home appliance, signage and back lighting markets. The company is the world's fifth largest LED supplier, holding more than 10,000 patents globally, while offering a wide range of LED technology and production capacity in areas such as "nPola", "Acrich", the world's first commercially produced AC LED, and "Acrich MJT - Multi-Junction Technology" a proprietary family of high-voltage LEDs.

The company's broad product portfolio includes a wide array of package and device choices such as Acrich and Acirch2, high-brightness LEDs, mid-power LEDs, side-view LEDs, and through-hole type LED as well as custom modules, displays, and sensors.

### Legal Disclaimer

Information in this document is provided in connection with Seoul Semiconductor products. With respect to any examples or hints given herein, any typical values stated herein and/or any information regarding the application of the device, Seoul Semiconductor hereby disclaims any and all warranties and liabilities of any kind, including without limitation, warranties of non-infringement of intellectual property rights of any third party. The appearance and specifications of the product can be changed to improve the quality and/or performance without notice.