Superior Efficacy & Lumen output with Small Form Factor

Z Power LED – Z5-M5

S1W0-3535xxxx03-00000000-00009

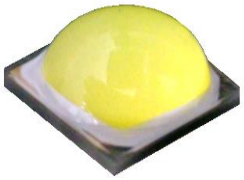

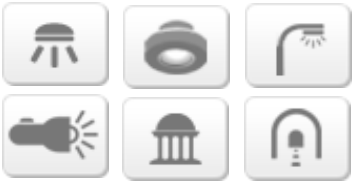

RoHS

MacAdam 3-Step

Product Brief

Description

- The Z-Power series is designed for high flux output applications with high current operation capability.
- It incorporates state of the art SMD design and low thermal resistant material.
- The Z Power LED is ideal light sources for directional lighting applications such as Spot Lights, various outdoor applications, automotive lightings and high performance torches .

Features and Benefits

- High Lumen Output and Efficacy
- Designed for high current operation
- Low Thermal Resistance
- ANSI compliant Binning
- Ceramic package

Key Applications

- Architectural
- Industrial
- Outdoor area
- Exterior Lighting
- Commercial

Table 1. Product Selection (Order Code Table)

Part Number	Color	Nominal CCT	Order Code	CRI Min
SZ5-M5-W0-C7	Cool White	6500K	S1W0-3535657003-00000000-00009	70
		5700K	S1W0-3535577003-00000000-00009	
		5000K	S1W0-3535507003-00000000-00009	
SZ5-M5-WN-C7	Neutral White	4000K	S1W0-3535407003-00000000-00009	
SZ5-M5-WW-C7	Warm White	3500K	S1W0-3535357003-00000000-00009	
		3000K	S1W0-3535307003-00000000-00009	
		2700K	S1W0-3535277003-00000000-00009	

Table of Contents

Index

•	Product Brief	1
•	Table of Contents	3
•	Performance Characteristics	4
•	Characteristics Graph	6
•	Color Bin Structure	11
•	Mechanical Dimensions	15
•	Recommended Solder Pad	16
•	Reflow Soldering Characteristics	17
•	Emitter Tape & Reel Packaging	18
•	Packing Information	19
•	Product Nomenclature	20
•	Handling of Silicone Resin for LEDs	21
•	Precaution For Use	22
•	Company Information	25

Performance Characteristics

Table 2. Characteristics

Parameter	Symbol	Value			Unit
		Min.	Typ.	Max.	
Forward Current	I_F	-	1050	3000 [1]	mA
Peak Pulsed Forward Current [2]	I_F			5000	mA
Forward Voltage (@1050mA, 85ºC)	V_F	-	-	3.15	V
Junction Temperature	T_j	-	-	150	ºC
Operating Temperature	T_{op}	-40	-	120	ºC
Storage Temperature	T_{stg}	-40	-	120	ºC
Viewing angle	θ		128		degree
Thermal resistance (J to S) [3]	$R\theta_{J-S}$	-	2	-	K/W
ESD Sensitivity(HBM)	Class 3B JEDEC JS-001-2017				

Notes :

[1] At Junction Temperature 25℃ condition.

[2] Pulse width ≤10ms, duty cycle ≤ 10% condition.

[3] $R\theta_{J-S}$ is tested at 1050mA.

- It is recommended to use it in the condition that the reliability is secured within the Max value.
- Thermal resistance can be increased substantially depending on the heat sink design/operating condition, and the maximum possible driving current will decrease accordingly.

Performance Characteristics

Table 3. Brightness Groups T_J=85℃
[* Flux values @700mA are calculated and for reference only]

Flux Bin Code	Min. Luminous Flux [lm]	
	I_F=1050mA	I_F=700mA [*]
X11	370	257
X12	385	268
X21	400	278
X22	420	292
X23	440	306
X24	460	320
X25	480	334
X26	500	348
X27	520	361
X28	540	375
X31	560	389

Notes : (1) Seoul Semiconductor maintains a tolerance of ±7% on flux and power measurements.

Characteristics Graph

Fig 1. Color Spectrum

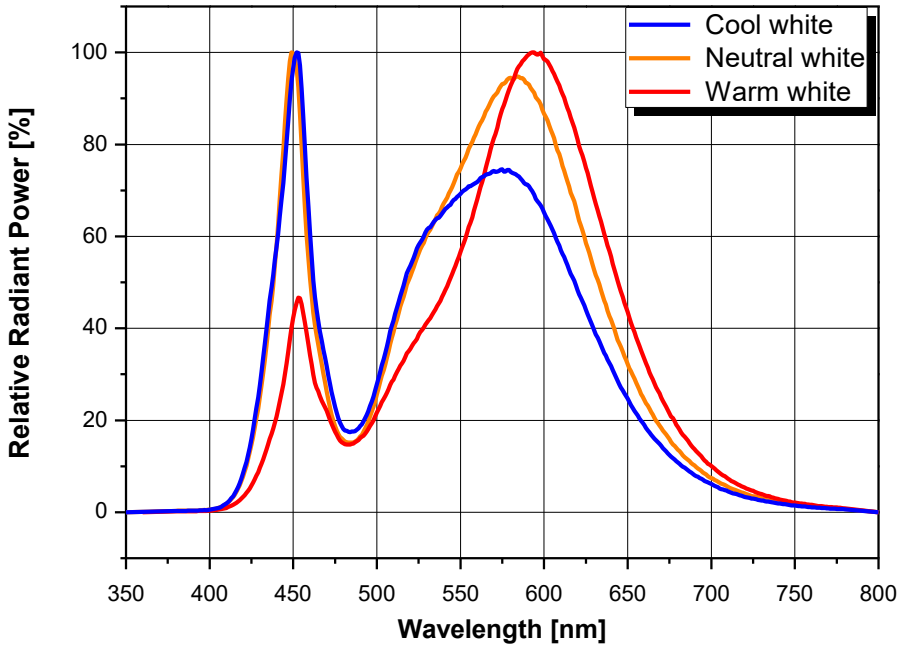

Fig 2. Typical Spatial Distribution

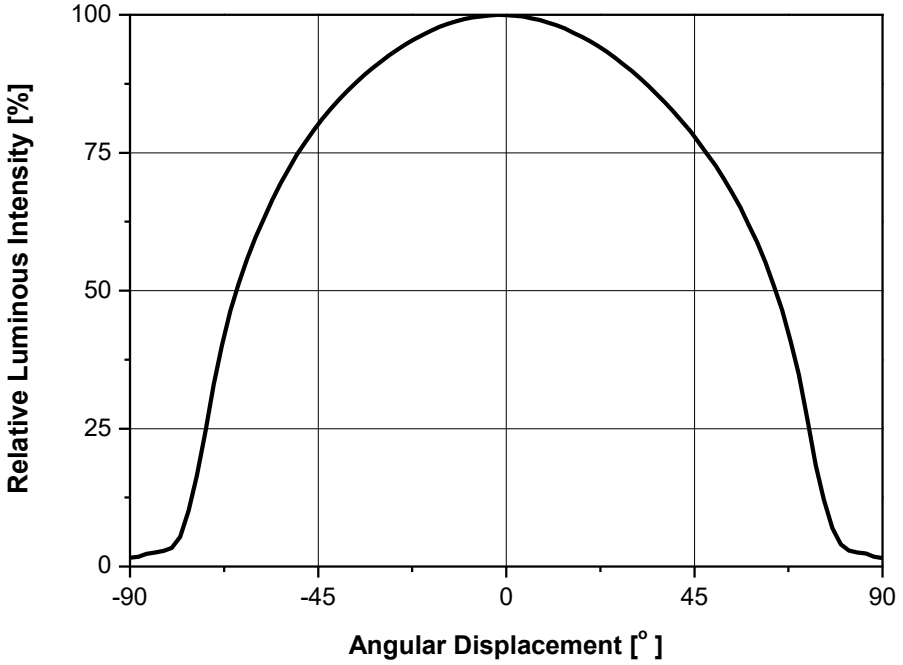

Characteristics Graph

Fig 3. Forward Voltage vs. Forward Current, T_j=85℃

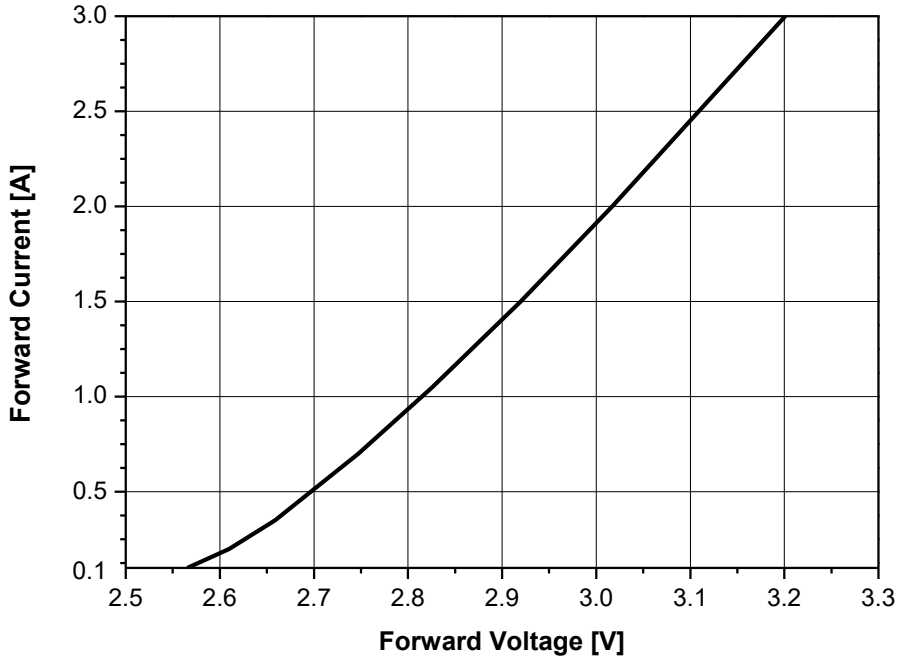

Fig 4. Forward Current vs. Relative Luminous Flux, T_j=85℃

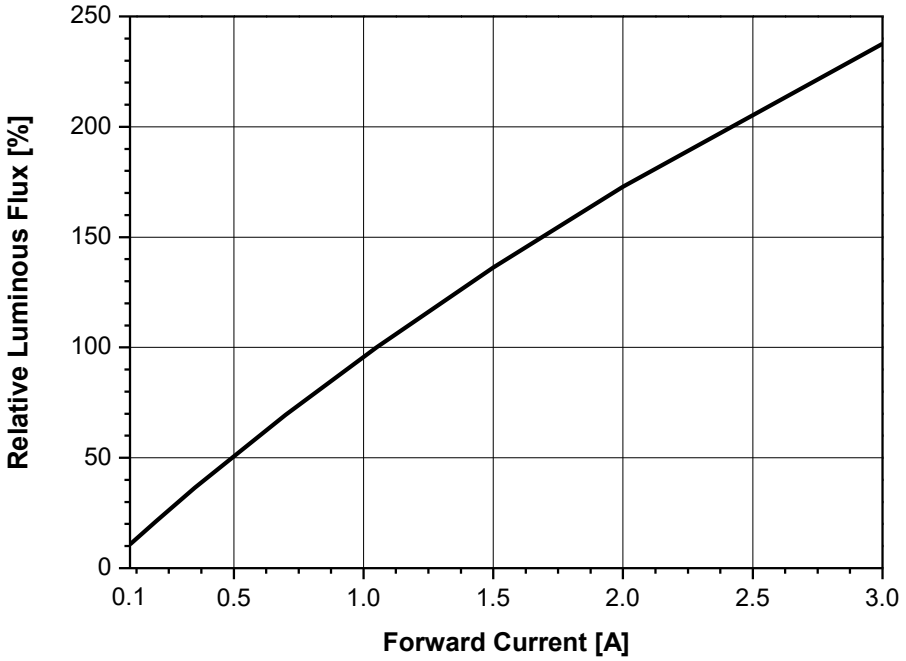

- Using less than 100mA is not recommended

Characteristics Graph

Fig 5. Forward Current vs. CIE X, Y Shift, T_j=85℃

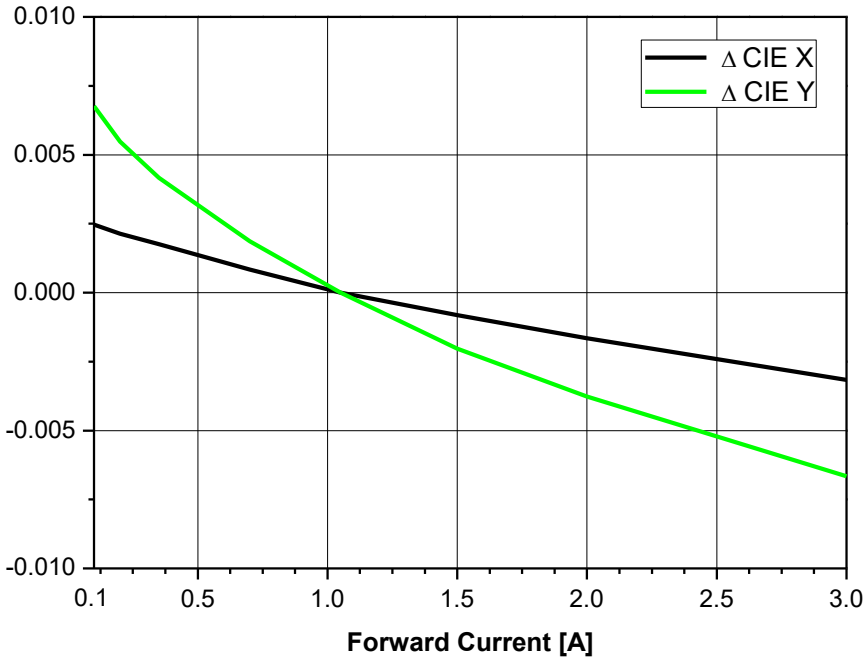

Fig 6. Junction Temp. vs. CIE X, Y Shift, I_F=1050mA

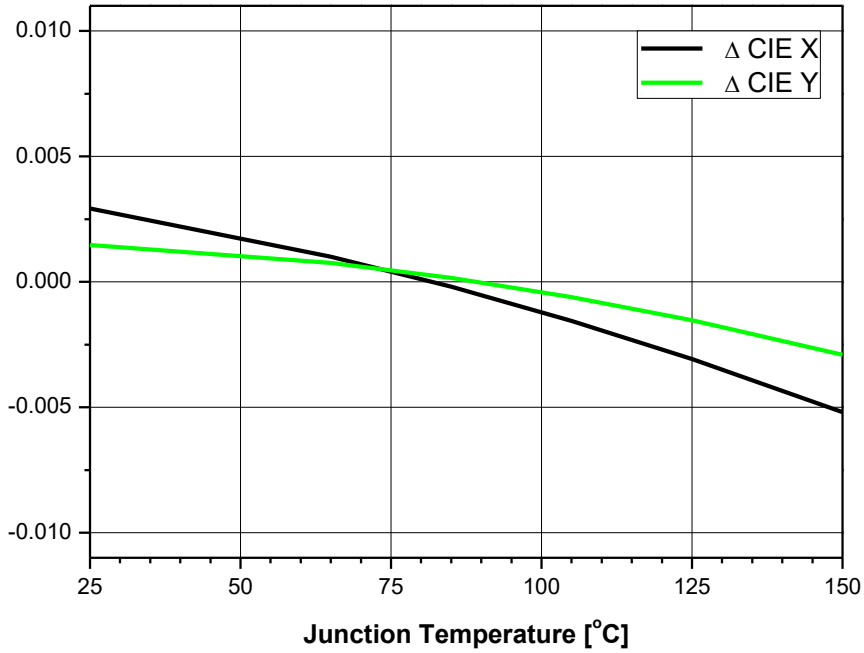

- Using less than 100mA is not recommended

Characteristics Graph

Fig 7. Relative Light Output vs. Junction Temperature, I_F=1050mA

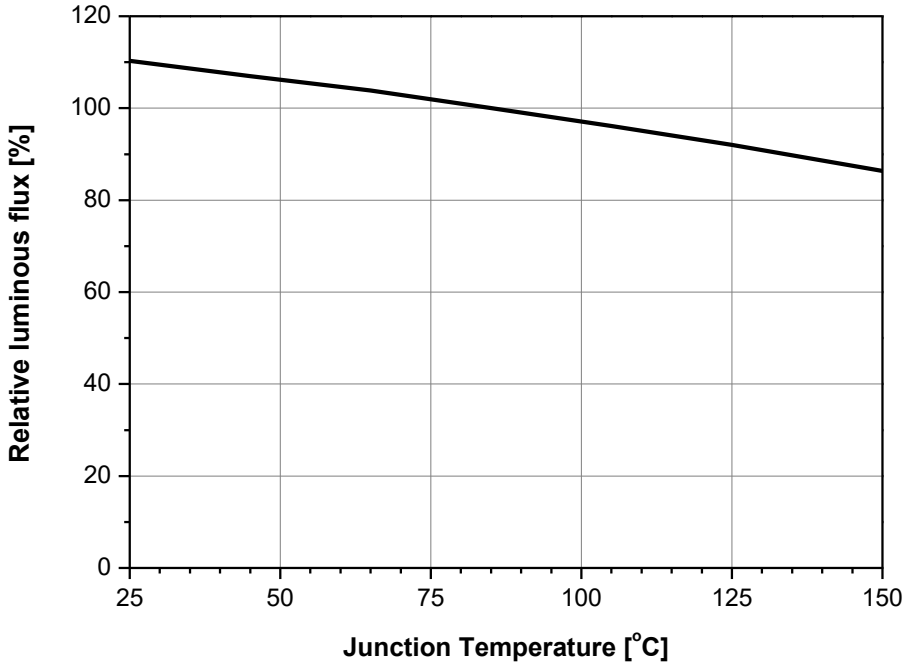

Fig 8. Relative Forward Voltage vs. Junction Temperature, I_F=1050mA

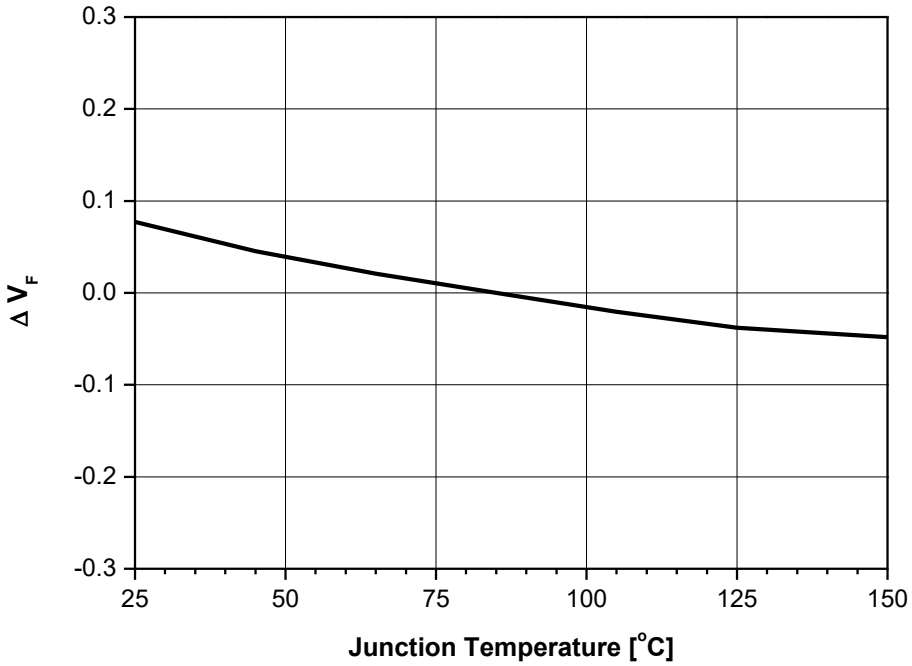

Characteristics Graph

Fig 9. Maximum Forward Current vs. Ambient Temperature, T_j(max.)=150℃

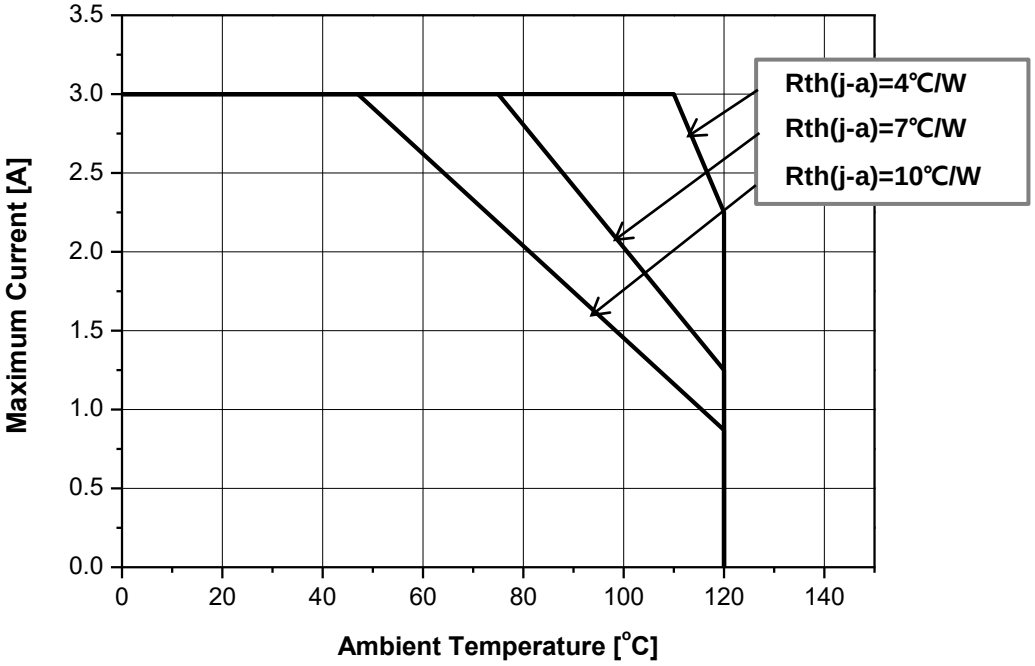

Color Bin Structure

Table 3. CRI70, Bin Code description, I_F=1050mA, T_j=85℃

Luminous Flux [lm]		
Bin Code	Min.	Max.
X11	370	385
X12	385	400
X21	400	420
X22	420	440
X23	440	460
X24	460	480
X25	480	500
X26	500	520
X27	520	540
X28	540	560
X31	560	590

Typical Forward Voltage [V_F]		
Bin Code	Min.	Max.
G0	2.75	2.95
G1	2.95	3.15

Available Rank

Table 4. CRI70, Flux Rank Distribution

CCT	CIE	Flux Rank								
6000 ~ 7000K	A	X21	X22	X23	X24	X25	X26	X27	X28	X31
5300 ~ 6000K	B	X21	X22	X23	X24	X25	X26	X27	X28	X31
4700 ~ 5300K	C	X21	X22	X23	X24	X25	X26	X27	X28	X31
3700 ~ 4200K	E	X21	X22	X23	X24	X25	X26	X27	X28	X31
3200 ~ 3700K	F	X21	X22	X23	X24	X25	X26	X27	X28	X31
2900 ~ 3200K	G	X21	X22	X23	X24	X25	X26	X27	X28	X31
2600 ~ 2900K	H	X21	X22	X23	X24	X25	X26	X27	X28	X31

Notes : (1) Correlated Color Temperature is derived from the CIE 1931 Chromaticity diagram.
Color coordinate : ±0.005, CCT ±5% tolerance.

(2) Seoul Semiconductor maintains a tolerance of ±7% on flux and power measurements.

(3) Φ_V is the total luminous flux output as measured with an integrating sphere.

(4) Tolerance is ±2.0 on CRI measurements.

(5) Tolerance is ±0.06V on forward voltage measurements.

Color Bin Structure

CIE Chromaticity Diagram (Cool White), T_j=85℃, I_F=1050mA

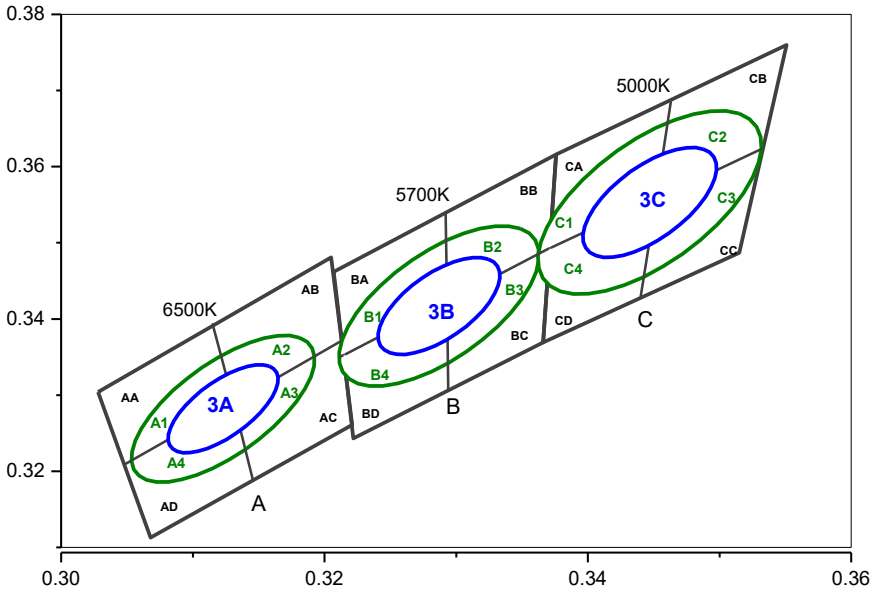

6500K 3Step		5700K 3Step		5000K 3Step	
3A		3B		3C	
Center point	0.3123 : 0.3282	Center point	0.3287 : 0.3417	Center point	0.3447 : 0.3553
Major Axis a	0.0066	Major Axis a	0.0072	Major Axis a	0.0081
Minor Axis b	0.0027	Minor Axis b	0.0032	Minor Axis b	0.0035
Ellipse Rotation Angle	58	Ellipse Rotation Angle	59	Ellipse Rotation Angle	60
6500K 5Step		**5700K 5Step**		**5000K 5Step**	
5A		5B		5C	
Center point	0.3123 : 0.3282	Center point	0.3287 : 0.3417	Center point	0.3447 : 0.3553
Major Axis a	0.0110	Major Axis a	0.0119	Major Axis a	0.0135
Minor Axis b	0.0045	Minor Axis b	0.0052	Minor Axis b	0.0059
Ellipse Rotation Angle	58	Ellipse Rotation Angle	59	Ellipse Rotation Angle	60

AA		AB		AC		AD	
CIE X	CIE Y	CIE X	CIE Y	CIE X	CIE Y	CIE X	CIE Y
0.3028	0.3304	0.3115	0.3393	0.3131	0.3290	0.3048	0.3209
0.3048	0.3209	0.3131	0.3290	0.3146	0.3187	0.3068	0.3113
0.3131	0.329	0.3213	0.3371	0.3221	0.3261	0.3146	0.3187
0.3115	0.3393	0.3205	0.3481	0.3213	0.3371	0.3131	0.329
BA		**BB**		**BC**		**BD**	
CIE X	CIE Y	CIE X	CIE Y	CIE X	CIE Y	CIE X	CIE Y
0.3207	0.3462	0.3292	0.3539	0.3293	0.3423	0.3215	0.3353
0.3215	0.3353	0.3293	0.3423	0.3294	0.3306	0.3222	0.3243
0.3293	0.3423	0.3371	0.3493	0.3366	0.3369	0.3294	0.3306
0.3292	0.3539	0.3376	0.3616	0.3371	0.3493	0.3293	0.3423
CA		**CB**		**CC**		**CD**	
CIE X	CIE Y	CIE X	CIE Y	CIE X	CIE Y	CIE X	CIE Y
0.3376	0.3616	0.3463	0.3687	0.3452	0.3558	0.3371	0.3493
0.3371	0.3493	0.3452	0.3558	0.344	0.3428	0.3366	0.3369
0.3452	0.3558	0.3533	0.3624	0.3514	0.3487	0.344	0.3428
0.3463	0.3687	0.3551	0.376	0.3533	0.3624	0.3452	0.3558

Color Bin Structure

CIE Chromaticity Diagram (Neutral White), T_j=85℃, I_F=1050mA

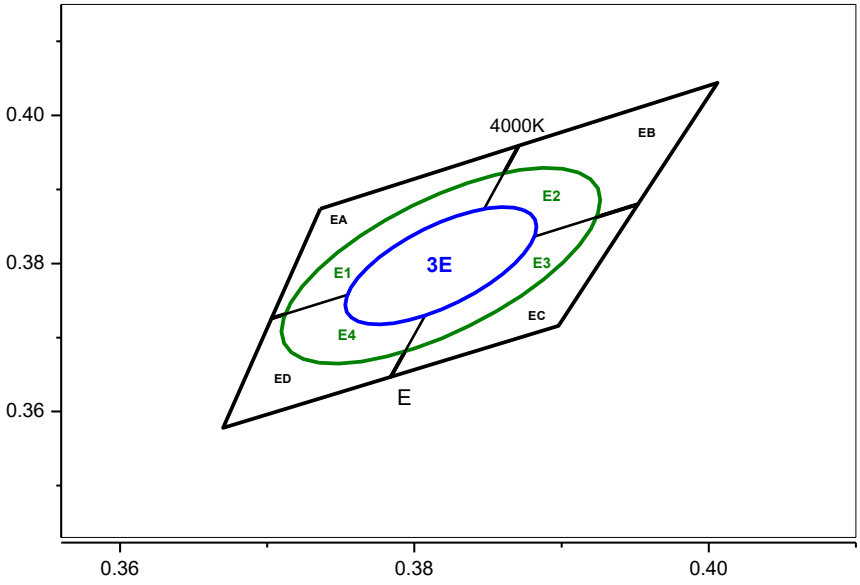

4000K 3Step

3E	
Center point	0.3818 : 0.3797
Major Axis a	0.0094
Minor Axis b	0.0041
Ellipse Rotation Angle	53.4

4000K 5Step

5E	
Center point	0.3818 : 0.3797
Major Axis a	0.0157
Minor Axis b	0.0067
Ellipse Rotation Angle	53

EA		EB		EC		ED	
CIE X	CIE Y	CIE X	CIE Y	CIE X	CIE Y	CIE X	CIE Y
0.3736	0.3874	0.3871	0.3959	0.3828	0.3803	0.3703	0.3726
0.3703	0.3726	0.3828	0.3803	0.3784	0.3647	0.3670	0.3578
0.3828	0.3803	0.3952	0.3880	0.3898	0.3716	0.3784	0.3647
0.3871	0.3959	0.4006	0.4044	0.3952	0.3880	0.3828	0.3803

Color Bin Structure

CIE Chromaticity Diagram (Warm White), T_j=85℃, I_F=1050mA

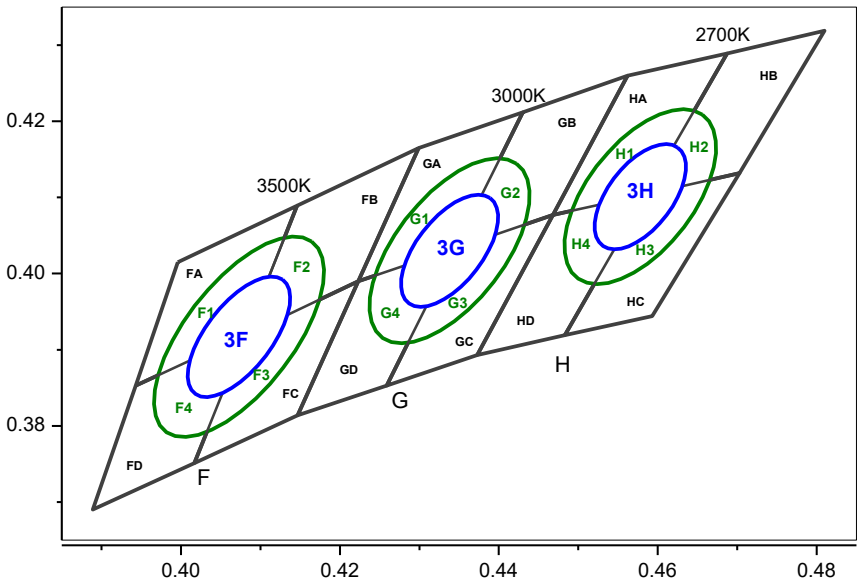

3500K 3Step		3000K 3Step		2700K 3Step	
3F		3G		3H	
Center point	0.4073 : 0.3917	Center point	0.4338 : 0.4030	Center point	0.4578 : 0.4101
Major Axis a	0.0093	Major Axis a	0.0086	Major Axis a	0.0080
Minor Axis b	0.0042	Minor Axis b	0.0042	Minor Axis b	0.0041
Ellipse Rotation Angle	54	Ellipse Rotation Angle	54	Ellipse Rotation Angle	54
3500K 5Step		**3000K 5Step**		**2700K 5Step**	
5F		5G		5H	
Center point	0.4073 : 0.3917	Center point	0.4338 : 0.4030	Center point	0.4578 : 0.4101
Major Axis a	0.0155	Major Axis a	0.0142	Major Axis a	0.0132
Minor Axis b	0.0068	Minor Axis b	0.0068	Minor Axis b	0.0068
Ellipse Rotation Angle	54	Ellipse Rotation Angle	54	Ellipse Rotation Angle	54

FA		FB		FC		FD	
CIE X	CIE Y	CIE X	CIE Y	CIE X	CIE Y	CIE X	CIE Y
0.3996	0.4015	0.4146	0.4089	0.4082	0.3920	0.3943	0.3853
0.3943	0.3853	0.4082	0.3920	0.4017	0.3751	0.3889	0.3690
0.4082	0.392	0.4223	0.3990	0.4147	0.3814	0.4017	0.3751
0.4146	0.4089	0.4299	0.4165	0.4223	0.3990	0.4082	0.3920
GA		**GB**		**GC**		**GD**	
CIE X	CIE Y	CIE X	CIE Y	CIE X	CIE Y	CIE X	CIE Y
0.4299	0.4165	0.4430	0.4212	0.4345	0.4033	0.4223	0.399
0.4223	0.3990	0.4345	0.4033	0.4259	0.3853	0.4147	0.3814
0.4345	0.4033	0.4468	0.4077	0.4373	0.3893	0.4259	0.3853
0.4430	0.4212	0.4562	0.426	0.4468	0.4077	0.4345	0.4033
HA		**HB**		**HC**		**HD**	
CIE X	CIE Y	CIE X	CIE Y	CIE X	CIE Y	CIE X	CIE Y
0.4562	0.426	0.4687	0.4289	0.4585	0.4104	0.4468	0.4077
0.4468	0.4077	0.4585	0.4104	0.4483	0.3919	0.4373	0.3893
0.4585	0.4104	0.4703	0.4132	0.4593	0.3944	0.4483	0.3919
0.4687	0.4289	0.481	0.4319	0.4703	0.4132	0.4585	0.4104

Mechanical Dimensions

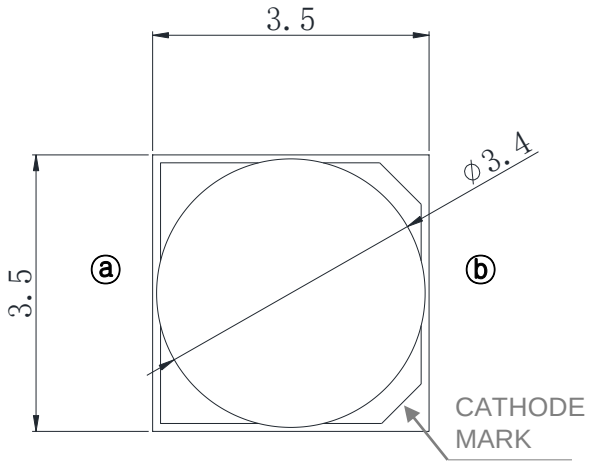

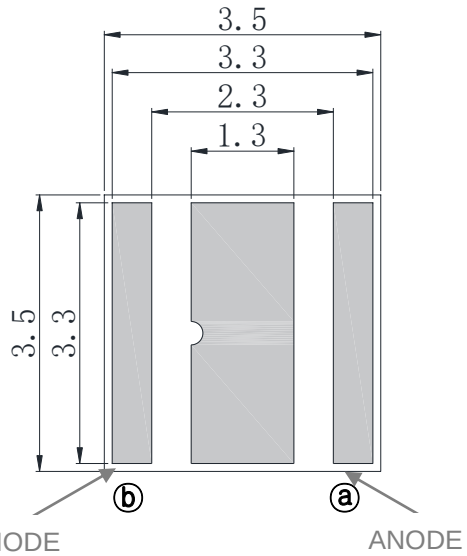

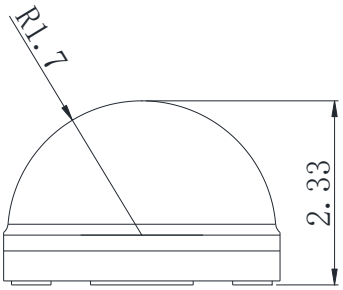

Circuit

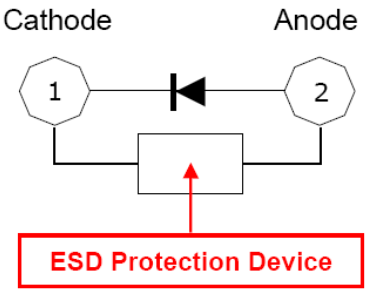

(1) All dimensions are in millimeters.
(2) Scale : none
(3) Undefined tolerance is ±0.1mm

Recommended Solder Pad

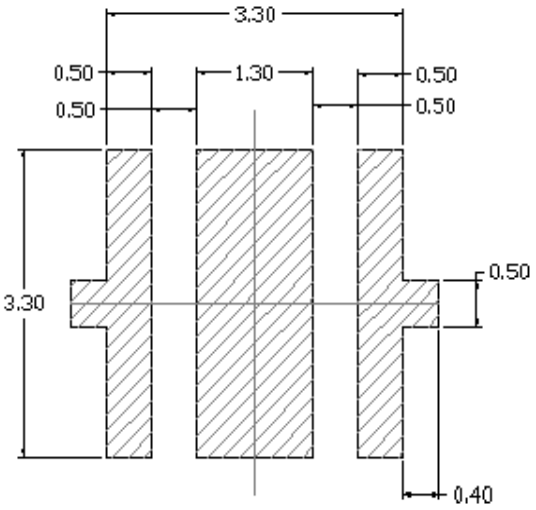

Recommended PCB Solder Pad

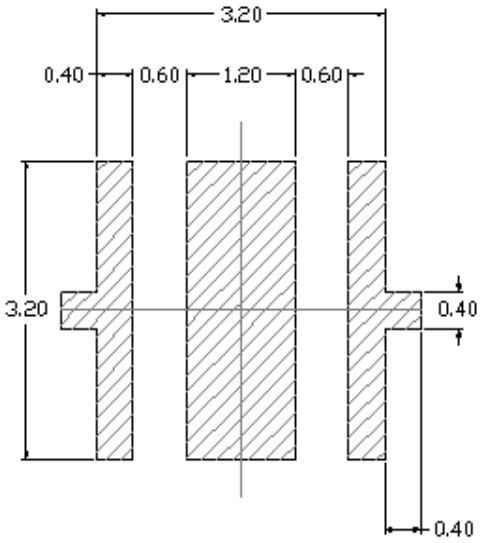

Recommended Stencil Pattern

(1) All dimensions are in millimeters.
(2) Scale : none
(3) This drawing without tolerances are for reference only.
(4) Undefined tolerance is ±0.1mm.

Reflow Soldering Characteristics

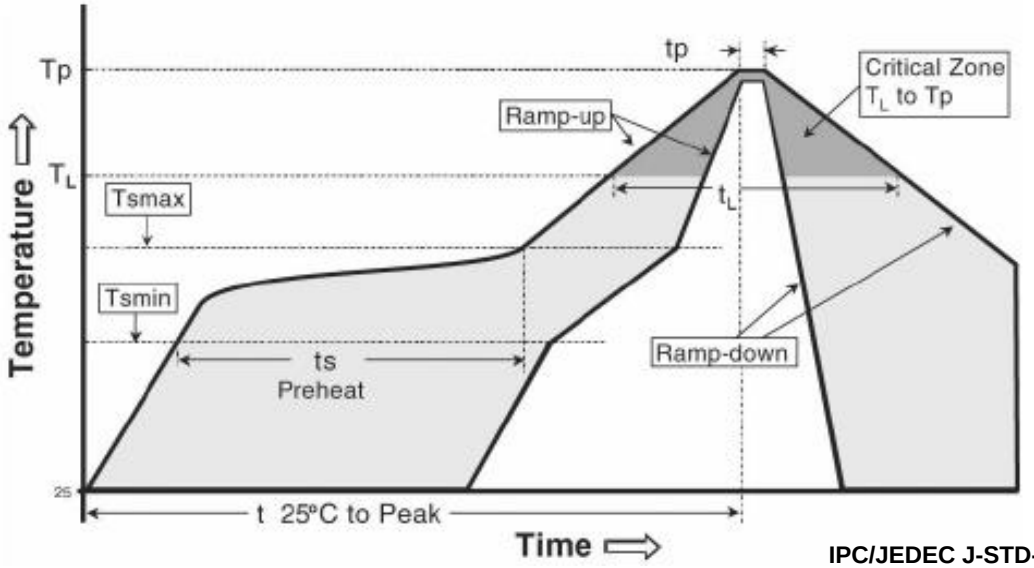

IPC/JEDEC J-STD-020

Profile Feature	Sn-Pb Eutectic Assembly	Pb-Free Assembly
Average ramp-up rate (Tsmax to Tp)	3° C/second max.	3° C/second max.
Preheat - Temperature Min (Tsmin) - Temperature Max (Tsmax) - Time (Tsmin to Tsmax) (ts)	 100 °C 150 °C 60-120 seconds	 150 °C 200 °C 60-180 seconds
Time maintained above: - Temperature (TL) - Time (tL)	 183 °C 60-150 seconds	 217 °C 60-150 seconds
Peak Temperature (Tp)	215℃	260℃
Time within 5°C of actual Peak Temperature (tp)2	10-30 seconds	20-40 seconds
Ramp-down Rate	6 °C/second max.	6 °C/second max.
Time 25°C to Peak Temperature	6 minutes max.	8 minutes max.

Caution

(1) Reflow soldering is recommended not to be done more than two times. In the case of more than 24 hours passed soldering after first, LEDs will be damaged.
(2) Repairs should not be done after the LEDs have been soldered. When repair is unavoidable, suitable tools must be used.
(3) Die slug is to be soldered.
(4) When soldering, do not put stress on the LEDs during heating.
(5) After soldering, do not warp the circuit board.

Emitter Tape & Reel Packaging

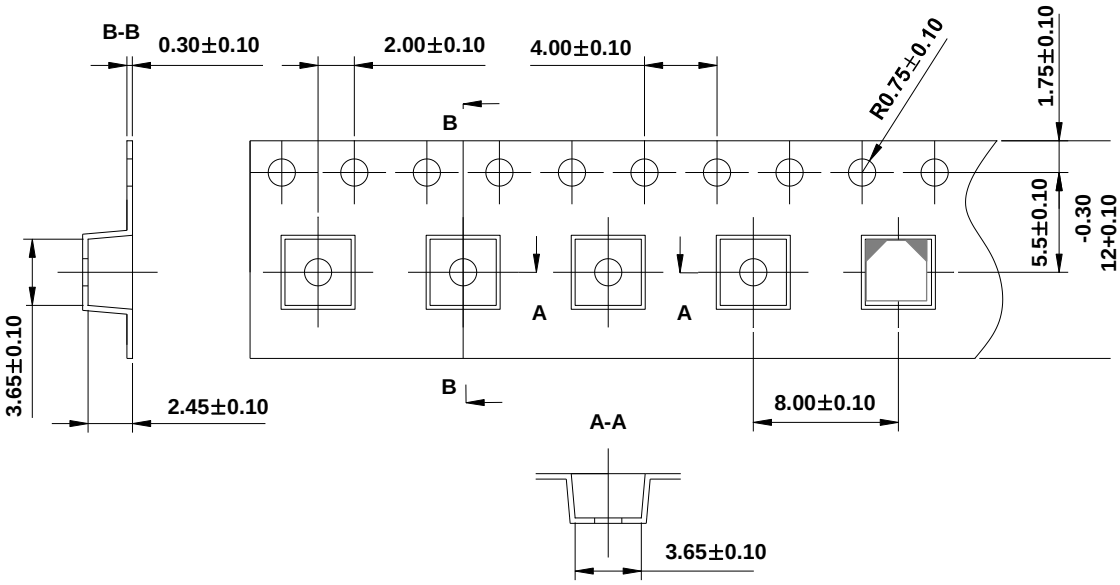

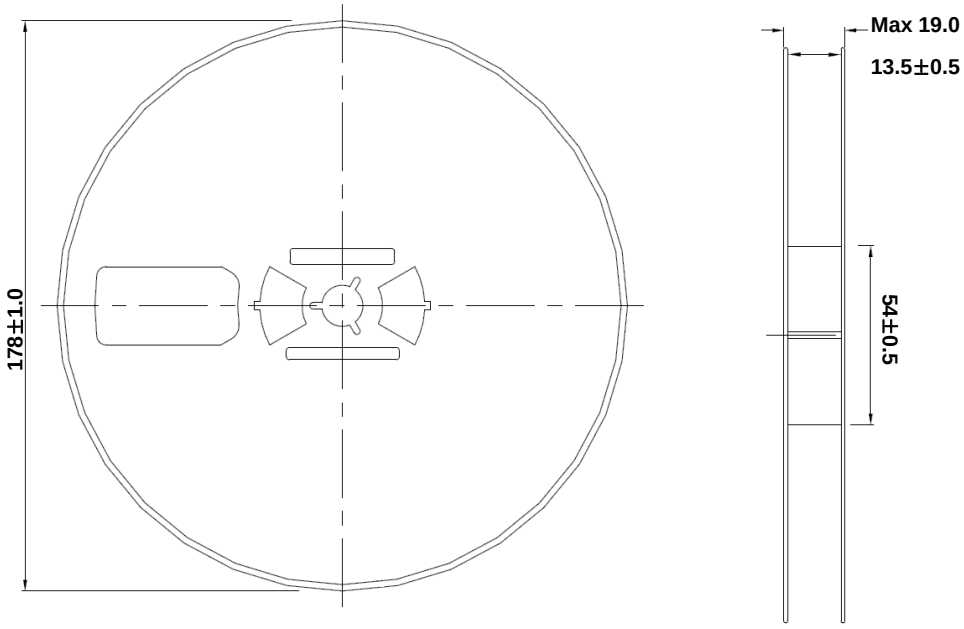

Notes :

UNIT: mm

1. Quantity : 900pcs/Reel
2. Cumulative Tolerance : Cumulative Tolerance/10 pitches to be ±0.2mm
3. Adhesion Strength of Cover Tape : Adhesion strength to be 10-60g when the cover tape is turned off from the carrier tape at the angle of 10º to the carrier tape
4. Package : P/N, Manufacturing data Code No. and quantity to be indicated on a damp proof Package

Packaging Information

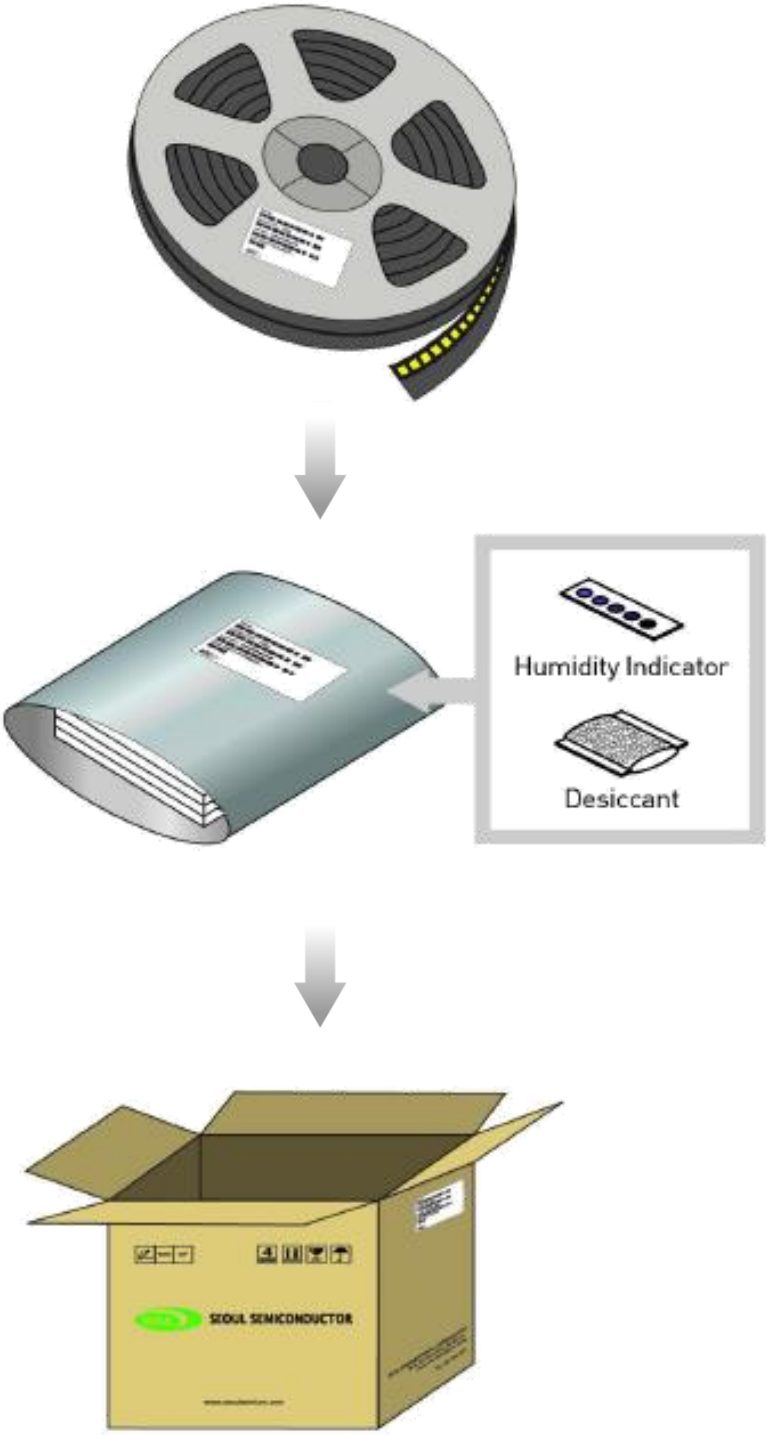

Order Code Nomenclature

Table 9. Order Code example

S	1	W	0	-	3	5	3	5	4	0	7	0	0	3	-	0	0	0	0	0	0	0	0	-	0	0	0	0	9
X_1	X_2	X_3	X_4	X_5	X_6	X_7	X_8	X_9	X_{10}	X_{11}	X_{12}	X_{13}	X_{14}	X_{15}	X_{16}	X_{17}	X_{18}	X_{19}	X_{20}	X_{21}	X_{22}	X_{23}	X_{24}	X_{25}	X_{26}	X_{27}	X_{28}	X_{29}	X_{30}

Code digits	Value	References	Description
X_1	S	Seoul Semiconductor	
X_2	1	Discrete LED	
X_3X_4	W0	General White	
X_5	-		
$X_6X_7X_8X_9$	3535	PKG size	
$X_{10}X_{11}$	40	CCT	27= 2700K, 30=3000K, 40=4000K, 50=5000K, 56=5600K, 65=6500K
$X_{12}X_{13}$	70	CRI	70=70CRI, 80= 80CRI, 90=90CRI
$X_{14}X_{15}$	03	Voltage	
X_{16}	-		
$X_{17}X_{18}X_{19}$	000	Flux Rank	000=Full
$X_{20}X_{21}X_{22}$	000	Vf Rank	000=Full
$X_{23}X_{24}$	00	CIE Rank	3S=3step ellipse, 5S=5step ellipse, 00=Full
X_{25}	-		
$X_{26}X_{27}$	00	Type	
$X_{28}X_{29}X_{30}$	009	Z5M5	PKG type internal code

Handling of Silicone Resin for LEDs

(1) During processing, mechanical stress on the surface should be minimized as much as possible. Sharp objects of all types should not be used to pierce the sealing compound.

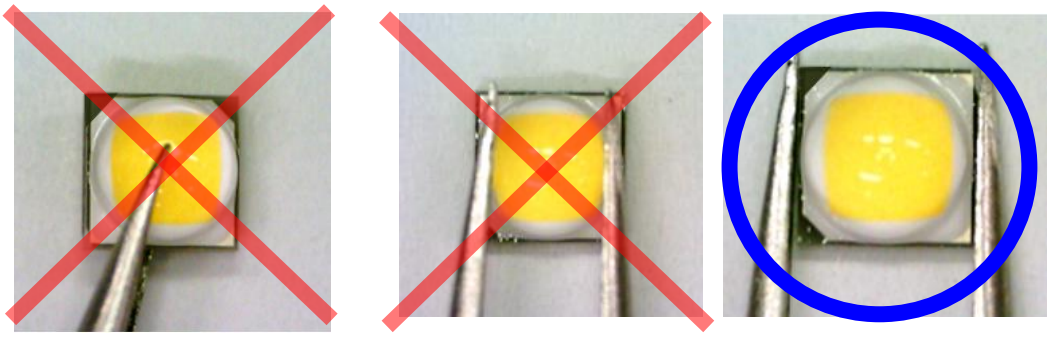

(2) In general, LED should only be handled from the side. By the way, this also applies to LED without a silicone sealant, since the surface can also become scratched.

(3) When populating boards in SMT production, there are basically no restrictions regarding the form of the pick and place nozzle, except that mechanical pressure on the surface of the resin must be prevented. This is assured by choosing a pick and place nozzle which is larger than the LED's reflector area.

(4) Silicone differs from materials conventionally used for the manufacturing of LEDs. These conditions must be considered during the handling of such devices. Compared to standard encapsulants, silicone is generally softer, and the surface is more likely to attract dust. As mentioned previously, the increased sensitivity to dust requires special care during processing. In cases where a minimal level of dirt and dust particles cannot be guaranteed, a suitable cleaning solution must be applied to the surface after the soldering of components.

(5) Seoul Semiconductor suggests using isopropyl alcohol for cleaning. In case other solvents are used, it must be assured that these solvents do not dissolve the package or resin. Ultrasonic cleaning is not recommended. Ultrasonic cleaning may cause damage to the LED.

(6) Please do not mold this product into another resin (epoxy, urethane, etc) and do not handle this product with acid or sulfur material in sealed space.

(7) Avoid leaving fingerprints on silicone resin parts.

Precaution for Use

(1) Storage

To avoid the moisture penetration, we recommend storing LED in a dry box with a desiccant . The recommended storage temperature range is 5℃ to 30℃ and a maximum humidity of RH50%.

(2) Use Precaution after Opening the Packaging

Use SMD techniques properly when solder the LED as separation of the lens may affect the light output efficiency.

Pay attention to the following:

a. Recommend conditions after opening the package

- Sealing / Temperature : 5 ~ 30℃ Humidity : less than RH60%

b. If the package has been opened more than 4 weeks **(MSL 2a)** or the color of the desiccant changes, components should be dried for 10-24hr at 65±5℃

(3) Do not apply mechanical force or excess vibration during the cooling process to normal temperature after soldering.

(4) Do not rapidly cool device after soldering.

(5) Components should not be mounted on warped (non coplanar) portion of PCB.

(6) Radioactive exposure is not considered for the products listed here in.

(7) Gallium arsenide is used in some of the products listed in this publication. These products are dangerous if they are burned or shredded in the process of disposal. It is also dangerous to drink the liquid or inhale the gas generated by such products when chemically disposed of.

(8) This device should not be used in any type of fluid such as water, oil, organic solvent and etc. When washing is required, IPA (Isopropyl Alcohol) should be used.

(9) When the LED are in operation the maximum current should be decided after measuring the package temperature.

(10) The appearance and specifications of the product may be modified for improvement without notice.

(11) Long time exposure of sunlight or occasional UV exposure will cause lens discoloration.

Precaution for Use

(12) VOCs (Volatile organic compounds) emitted from materials used in the construction of fixtures can penetrate silicone encapsulants of LED and discolor when exposed to heat and photonic energy. The result can be a significant loss of light output from the fixture. Knowledge of the properties of the materials selected to be used in the construction of fixtures can help prevent these issues.

(13) Attaching LEDs, do not use adhesives that outgas organic vapor.

(14) The driving circuit must be designed to allow forward voltage only when it is ON or OFF. If the reverse voltage is applied to LED, migration can be generated resulting in LED damage.

(15) LED is sensitive to Electro-Static Discharge (ESD) and Electrical Over Stress (EOS). Below is a list of suggestions that Seoul Semiconductor purposes to minimize these effects.

a. ESD (Electro Static Discharge)

Electrostatic discharge (ESD) is the defined as the release of static electricity when two objects come into contact. While most ESD events are considered harmless, it can be an expensive problem in many industrial environments during production and storage. The damage from ESD to an LED may cause the product to demonstrate unusual characteristics such as:

- Increase in reverse leakage current lowered turn-on voltage
- Abnormal emissions from the LED at low current

The following recommendations are suggested to help minimize the potential for an ESD event.
One or more recommended work area suggestions:

- Ionizing fan setup
- ESD table/shelf mat made of conductive materials
- ESD safe storage containers

One or more personnel suggestion options:
- Antistatic wrist-strap
- Antistatic material shoes
- Antistatic clothes

Environmental controls:
- Humidity control (ESD gets worse in a dry environment)

Precaution for Use

b. EOS (Electrical Over Stress)

Electrical Over-Stress (EOS) is defined as damage that may occur when an electronic device is subjected to a current or voltage that is beyond the maximum specification limits of the device.
The effects from an EOS event can be noticed through product performance like:

- Changes to the performance of the LED package
  (If the damage is around the bond pad area and since the package is completely encapsulated the package may turn on but flicker show severe performance degradation.)
- Changes to the light output of the luminaire from component failure
- Components on the board not operating at determined drive power

Failure of performance from entire fixture due to changes in circuit voltage and current across total circuit causing trickle down failures. It is impossible to predict the failure mode of every LED exposed to electrical overstress as the failure modes have been investigated to vary, but there are some common signs that will indicate an EOS event has occurred:

- Damaged may be noticed to the bond wires (appearing similar to a blown fuse)
- Damage to the bond pads located on the emission surface of the LED package
  (shadowing can be noticed around the bond pads while viewing through a microscope)
- Anomalies noticed in the encapsulation and phosphor around the bond wires.
- This damage usually appears due to the thermal stress produced during the EOS event.

c. To help minimize the damage from an EOS event Seoul Semiconductor recommends utilizing:

- A surge protection circuit
- An appropriately rated over voltage protection device
- A current limiting device

Company Information

Published by

Seoul Semiconductor © 2013 All Rights Reserved.

Company Information

Seoul Semiconductor (www.SeoulSemicon.com) manufacturers and packages a wide selection of light emitting diodes (LEDs) for the automotive, general illumination/lighting, Home appliance, signage and back lighting markets. The company is the world's fifth largest LED supplier, holding more than 10,000 patents globally, while offering a wide range of LED technology and production capacity in areas such as "nPola", "Acrich", the world's first commercially produced AC LED, and "Acrich MJT - Multi-Junction Technology" a proprietary family of high-voltage LEDs.

The company's broad product portfolio includes a wide array of package and device choices such as Acrich and Acirch2, high-brightness LEDs, mid-power LEDs, side-view LEDs, and through-hole type LEDs as well as custom modules, displays, and sensors.

Legal Disclaimer

Information in this document is provided in connection with Seoul Semiconductor products. With respect to any examples or hints given herein, any typical values stated herein and/or any information regarding the application of the device, Seoul Semiconductor hereby disclaims any and all warranties and liabilities of any kind, including without limitation, warranties of non-infringement of intellectual property rights of any third party. The appearance and specifications of the product can be changed to improve the quality and/or performance without notice.